HEAT & COOL

ECU SERIES TEMPERATURE CONTROL UNIT

Big On Precision. Small In Size

Immersion Style Incoloy® Heaters With IEC Contractors

Small And Compact With The Price To Match

ECU SERIES WATER TEMPERATURE CONTROL UNIT

The ECU Series Water Temperature Control Units meet all of your direct injection temperature control needs. Standard features include vertically mounted Incoloy® immersion heaters, bronze-fitted centrifugal pumps from 3/4 hp to 7 1/2 hp, solenoid valves up to 3/4" NPT, branch circuit fusing, and automatic vent sequence. These units are protected by an independent high temperature safety thermostat, an adjustable low supply water pressure switch (set at 16 psig) and 150 psi pressure relief valve.

- *Off-the-shelf microprocessor based PID temperature controller with Process and Setpoint LED readouts*
- *Graphic control panel with indicator and warning lights*
- *Compact cabinet*
- *Branch fusing*
- *Independent high temperature safety thermostat*

1100 E Woodfield Road
Schaumburg, IL 60173 USA
Tel. 847-273-7700 Fax 847-273-7804

www.aecinternet.com

WHITLOCK/ MATERIAL HANDLING | HEAT & COOL | BLEND & RECLAIM | NELMOR/ GRANULATE | DOWNSTREAM EXTRUSION | AUTOMATE | SYSTEMS CONTRACTING | SERVICE

AEC is committed to a continuing program of product improvement.

©2007 AEC, Inc.

Bulletin AE1-155.2

Specifications, appearances and dimensions are subject to change without notice.

Printed in USA

HEAT & COOL

ECU SERIES TEMPERATURE CONTROL UNIT

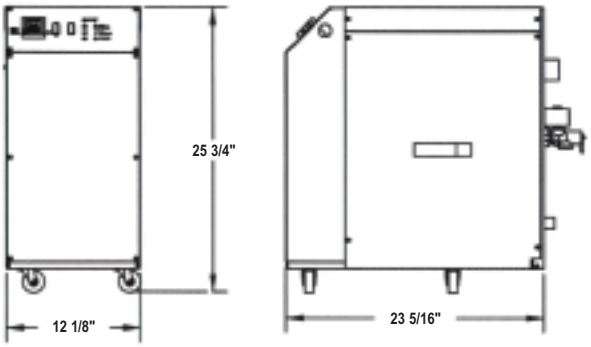

ECU SERIES STANDARD FEATURES

- *NEMA 1 electrical enclosure*
- *Centrifugal pump*
- *Incoloy® heater*
- *Solenoid valve*
- *Adjustable low pressure switch*

AVAILABLE OPTIONS

- *12 kW heater*
- *300ºF operation; includes silicon carbide seal (requires 55 psi minimum water supply pressure)*
- *Manual bypass*
- *Pressure regulator/relief valve for water supply*
- *Y-strainer*
- *Quick-cool switch*
- *1/2" and 3/4" cooling solenoid slow-closing valve*
- *Auto system water purge*
- *Audible/visual alarm*
- *Remote start/stop*
- *RS232, RS485, RS485 SPI communications*
- *Rotary through-the-door disconnect switch*
- *Operating voltages: 208/3/60, 230/6/60, 200-400/3/50, 575/3/60*

1100 E Woodfield Road
Schaumburg, IL 60173 USA
Tel. 847-273-7700 Fax 847-273-7804

www.aecinternet.com

WHITLOCK/ MATERIAL HANDLING | HEAT & COOL | BLEND & RECLAIM | NELMOR/ GRANULATE | DOWNSTREAM EXTRUSION | AUTOMATE | SYSTEMS CONTRACTING | SERVICE

AEC is committed to a continuing program of product improvement.

©2007 AEC, Inc.

Bulletin AE1-155.2

Specifications, appearances and dimensions are subject to change without notice.

Printed in USA